Digital Circuit Design

Queen Mary University of London

School of Electronic Engineering and Computer Science

Course Code: EBU4202

Lab Sheet 1: Introduction to Digital Logic	Date: 2024-04-11
Student's Surname, First Name (pinyin): _____	Student's BUPT Number, Class Number: _____
Email: _____	Total Mark (out of **25**): 23/25

IMPORTANT:

(a) In advance of the lab session: Print this Lab Sheet, read it and complete all the indicated "Preparatory Work".
(b) Write all your answers on this Lab Sheet, where indicated.
(c) Use additional A4 sheets of paper if you require more space to write your answers, ensuring that the question numbers are indicated clearly.
(d) Before handing in your Lab Sheet, make sure that you fill in the Table above with your personal details, ***and*** staple any additional answer sheets (with your name written on them) together with this Lab Sheet.
(e) Any question marked with the symbol **(***)** requires that you demonstrate your work to one of the TAs.

1. Learning Objectives

The aims of this Lab Session are to:

(a) set up a *breadboard* that you will use to build and test all your digital circuits ***and***,
(b) reinforce the ideas on the operation of the basic set of digital logic gates (i.e., AND, NAND, OR, NOR and NOT) by testing a series of 5 integrated circuits and completing their truth tables.

You will then combine a small number of gates toproduce other simple functions. In later experiments, you will use these gates as building blocks to construct more complex functions (e.g., *adders* and *multipliers*).

2. Preparatory Work

Question 2.1 [2 Marks] – Write down below the expected truth tables for all the above gates and for the Exclusive-OR (XOR) function, indicatingclearly both the inputs and outputs. Also write down De Morgan's theorem ***and*** use it to prove that the circuit shown in **Figure 13** is equivalent to the Exclusive-OR function. Show all your work and calculations.

Answer to Question 2.1 Name: Xu Yuting

Truth Table:

AND

Input		Output
A	B	F
0	0	0
0	1	0
1	0	0
1	1	1

NAND

Input		Output
A	B	F
0	0	1
0	1	1
1	0	1
1	1	0

OR

Input		Output
A	B	F
0	0	0
0	1	1
1	0	1
1	1	1

NOR

Input		Output
A	B	F
0	0	1
0	1	0
1	0	0
1	1	0

NOT

Input	Output
A	F
0	1
1	0

XOR

$F = \bar{A}B + A\bar{B}$

Input		Output
A	B	F
0	0	0
0	1	1
1	0	1
1	1	0

De Morgan: $\bar{A} + \bar{B} = \overline{AB}$

$\bar{A}\,\bar{B} = \overline{A+B}$

Proof:

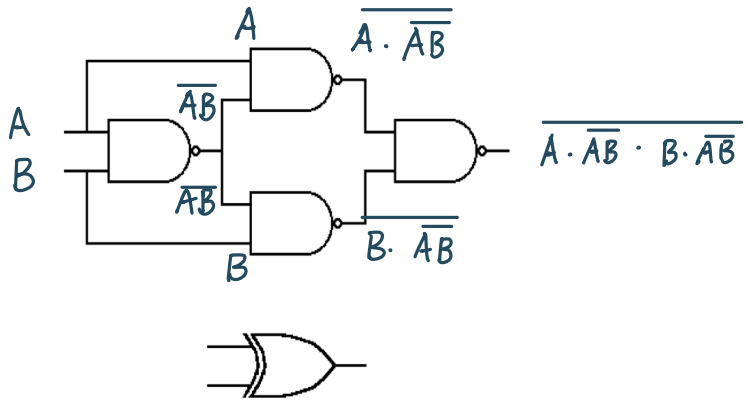

Figure 13 – The Exclusive OR function, using NAND gates and the XOR logic symbol.

Answer to Question 2.1

$$\overline{A\cdot\overline{AB}\cdot B\cdot\overline{AB}} = \overline{A\cdot\overline{AB}} + \overline{B\cdot\overline{AB}}$$
$$= \bar{A} + AB + \bar{B} + AB$$
$$= \overline{(\bar{A} + AB)(\bar{B} + AB)}$$
$$= \overline{(\bar{A} + B)(\bar{B} + A)}$$
$$= \overline{\bar{A} + B} + \overline{\bar{B} + A}$$
$$= A\bar{B} + B\bar{A}$$

3. Apparatus

All the experiments are performed on a general-purpose logic board or "breadboard" (see **Figure 1**) with a fixed hardware configuration, into which integrated circuits can be inserted. Designs are implemented by pushing leads or components into the board. Beneath the surface, a fixed network of connections is used to connect the logicelements as required. Switches for setting input conditions and LED indicators for observing outputs or checking logic levels within a complex circuit are implemented by using a combination of an LED and a 220 Ohms resistor, connected to a power supply.

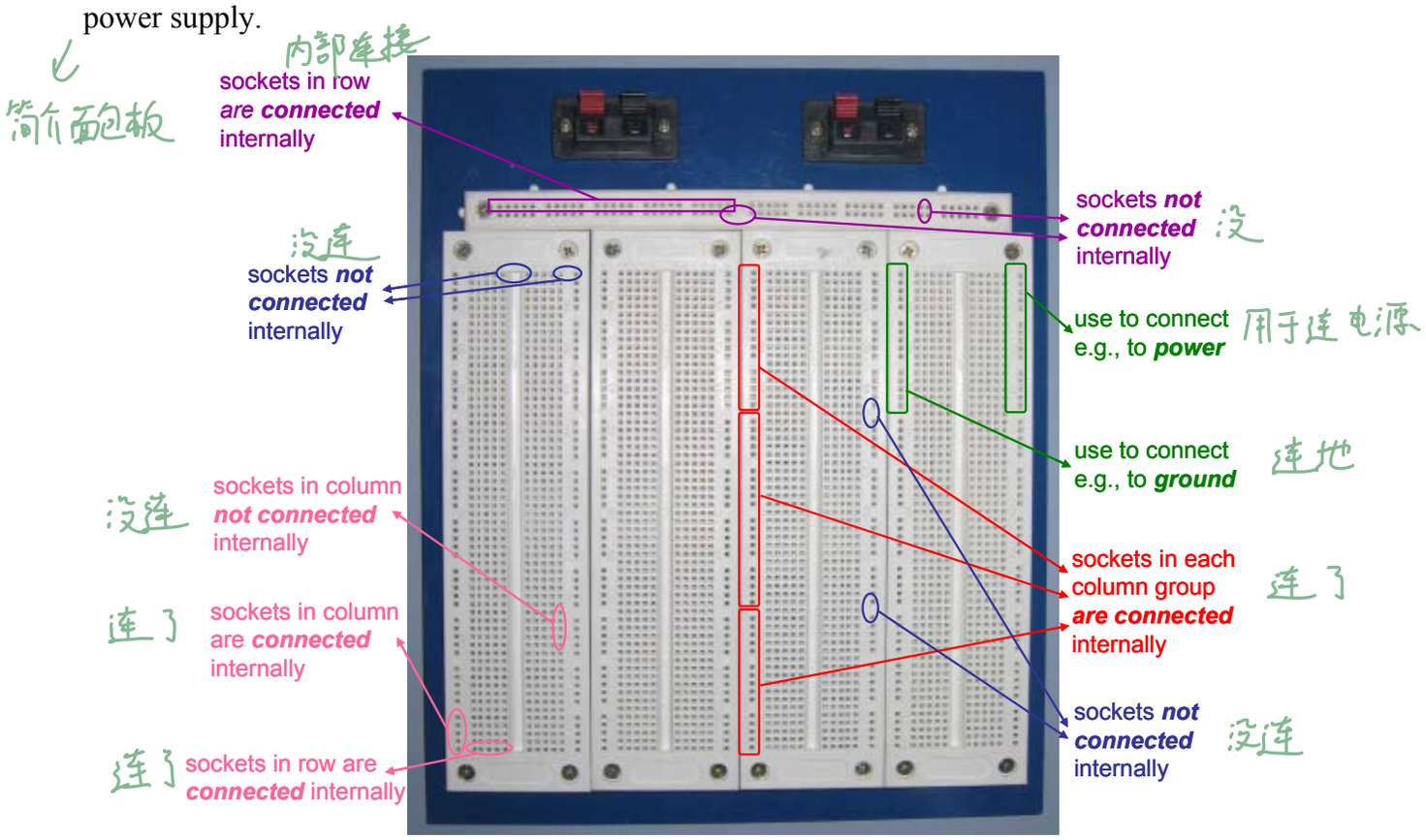

Figure 1 – "Breadboard" (Model: SYB-118) panel layout.

4. Familiarisation

The "breadboard" has m any tiny holes (also called *sockets*) into which the electronic components are pushed. It consists of three main areas (see **Figure 2**): 分为3大块

1. Top Zone → This has two sets of connectors (red and black – from left to right). Usually, you will connect the red (*Va*) and black (*Gnd*) connectors to the Power Supply Unit.
2. Middle Zone (2 rows, in 10 separate sets) → These rows are usually connected to the Power Supply Unit, once you have used the red and black connectors mentioned in the previous bullet point. Both rows can be used for connecting to***power*** (*+5 volts*) or to ***ground*** (*0 volts*). However, it is useful to use the following convention: use each row for one purpose only (i.e., either ***ground*** or ***power***).
3. Bottom Zone (4 sets, each containing: 2 five-wide columns and 2 single columns) → This is the area where all the electronic com ponents (including those in **Figure 5**) will be pushed into. Again, each of the single columns in this area can be used for connecting to ***ground*** or ***power***, through a connection to one of the sets in the Middle Zone. **Figure 1** illustrates how each of the columns can be used.

连电源、、黑接地

一行 要么电 要么地

此部分看上图

Figure 2 – "Zones" of the Breadboard.

All the ICs you will be using are inside so-called 'Dual In-Line' packages (also known as DIL or DIP). There is always a marker on the top surface at one end of the package to indicate *pin 1* (see **Figure 3**); the ICs used in this experiment have only 14 pins. This marker is usually a *notch* or a small circular depression. The remaining pins are then numbered anticlockwise from *pin 1*.

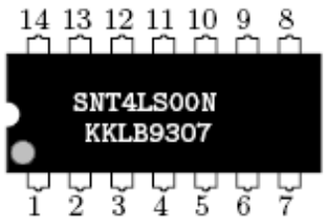

用来看正反的标记

Figure 3 – Example of 14-pin IC.

1. 让所有IC都一个方向
2. 要自己连上电源

Notes:

1. It is usually a good idea to have all ICs in the same orientation[1] to avoid confusion when connecting them up.
2. Although most logic diagrams do not show Power Supply connections, your circuits will not function without them! (See also Section 6 – "Logic Gates".)

In the SIL Commoned Resistors used for the configured breadboard, *pin 1* is identified by a mark (a dot), whereas in the LED Bar Graph Array,*pin 1* is labelled as the so-called anode mark. See **Figure 4** for a representation of *pin 1* in these components.

电阻

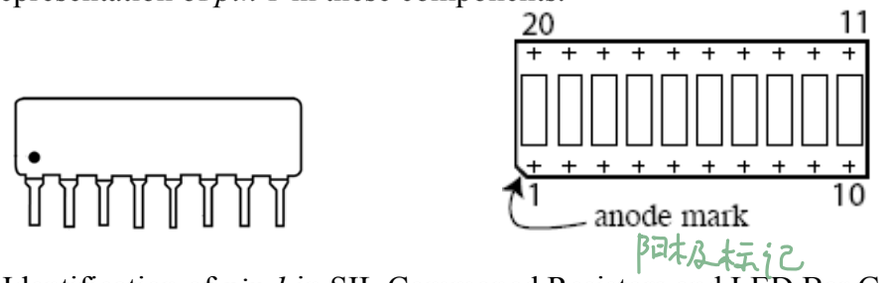

Figure 4 – Identification of *pin 1* in SIL Commoned Resistors and LED Bar Graph Arrays.

5. Setting up the Breadboard

先设置面包板，然后再测试数字电路

Before you can start building and testing digital circuits, you need to set up the *breadboard*. This requires an understanding of how the *breadboard* works, as well as the electronic components below:

- ✓ Power Supply Unit 供电单元
- ✓ Breadboard (see **Figure 1**) 面包板
- ✓ Connecting Wires 电线
- ✓ LED Bar Graph Array (10 elements; 2 not used) → It consists of 10 Light Eitting Diodes and is used to provide a visual indication of an analogue voltage signal. 提供视觉指示
- ✓ 8-Channel Darlington Driver IC (ULN2803A) → An electronic switch that provides an output signal to drive output subsystems requiring high current. 输出子系统 提供输出信号来驱动需要大电流的
- ✓ 2 SIL Com moned Resistors (220 *ohms*; 9-pin) → This is a Single-In-Line package of 9 resistors with one common connection; its function is to reduce the flow of electric current. 电阻 减少电流
- ✓ DIL Switch (8 way) → It provides switches that close when pressed. The output signal from a given switch goes high when that switch is pressed. 可以让输出信号↑

You can find a representation of the last four components in **Figure 5** (together with profile representations in **Figure 4**), but please note that some components available in your lab may look slightly different e.g., you may have to use several individual resistors instead of the SIL Commoned Resistor shown below. Your lab supervisors will be able to advise if alternative components (but with the same functionality) need to be used instead.

实验室的元件不完全相同.

[1] This applies in general, but it does not apply to the orientation of the LED Bar Graph Array (as shown by **Figure 6**).

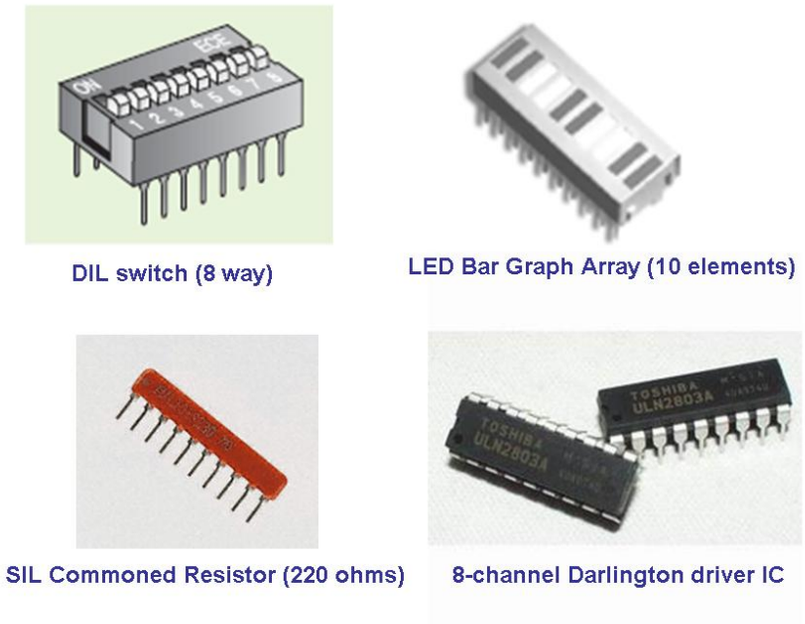

Figure 5 – Some electronic components for the *breadboard*.

Figure 6 shows the configuration required to set up the *breadboard*, using the components listed before. Make sure you assemble the components as indicated (<u>including any alternative components you may have to use</u>), and then test its operation by doing the following:

1. Start with the Power Supply Unit turned OFF: You should not see any LEDs in the LED Bar Graph Array turned ON.
2. Switch the Power Supply Unit ON.
3. Switch e.g., switch 5 in the DIL Switch to ON: You should see the corresponding LED light be turned ON.
4. Turn switch 5 back to OFF: You should see the corresponding LED light be turned OFF.
5. Try *Steps 3* and *4* for other switches in the DIL Switch.

IMPORTANT: This *breadboard* configuration will be used in all of the hardware labs of this course. Therefore, you should take notes on the steps that you were required to follow to set up the *breadboard*, as this will save you time when starting the other hardware labs later in the semester.

设置面包板的步骤:

1. 关闭电源
2. 关闭所有 LED 和 LED Bar Graph Array
3. 打开电源
4. 打开 DIL Switch 的 5 ⟶ 看到相应 LED 灯亮
5. 关闭 DIL Switch 的 5 ⟶ 看到相应 LED 灯灭
6. 对于 DIL 里的其它开关, 重复 4.5 两步

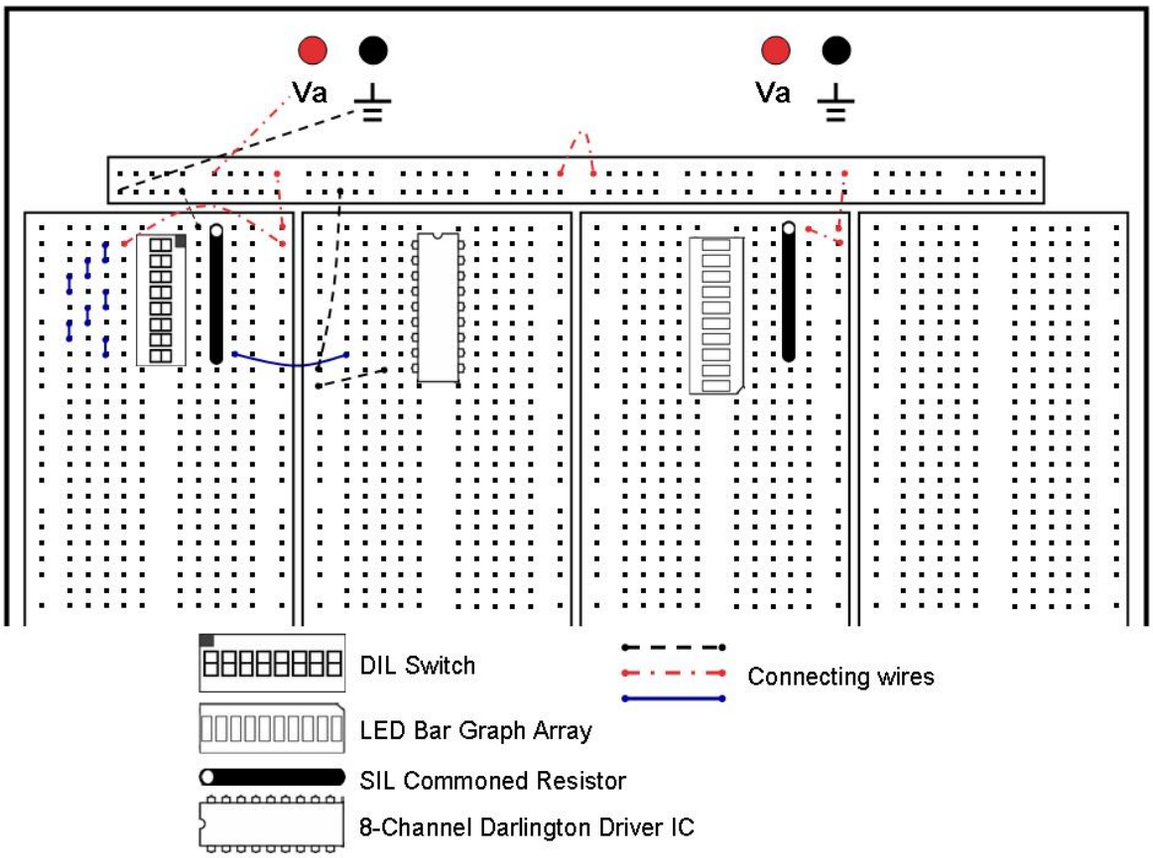

Figure 6 – The *breadboard* configuration[2].

6. Logic Gates 展示了5种IC

For this experiment, you will be using the following TTL (Transistor-Transistor Logic) integrated circuits (**Figure 7** through to **Figure 11** show the ICs viewed from the top):

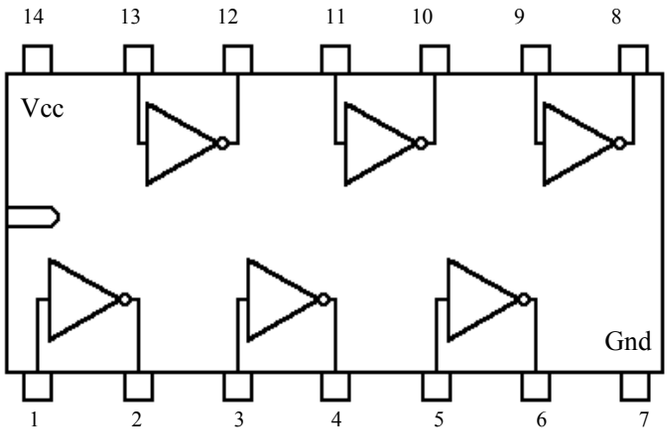

Figure 7 – 7404 Hex inverters (labelled *HD74LS04P*) i.e., 6 NOT gates in one IC.

[2] This configuration assumes that all the components are exactly as in **Figure 5** – if this is not the case, your lab supervisors (*aka* Teaching Assistants) will be able to advise of any required adjustments to the *breadboard* configuration.

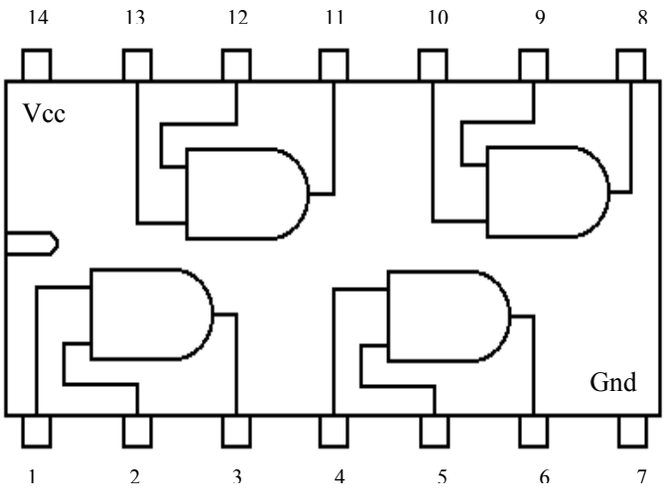

Figure 8 – 7408 (labelled *HD74LS08P*) quadruple 2-input AND gates.

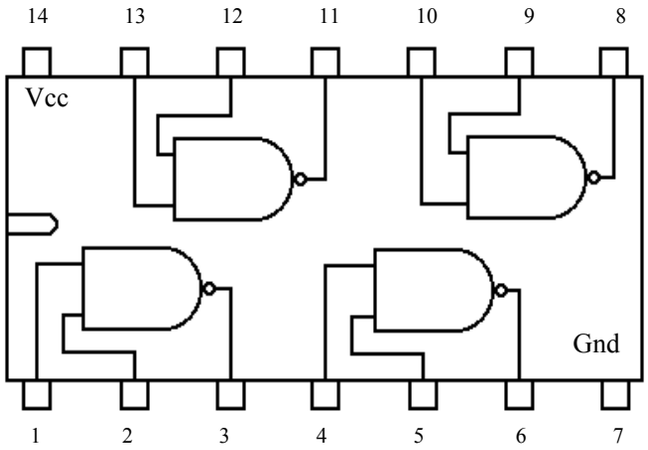

Figure 9 – 7400 (labelled *HD74LS00P*) quadruple 2-input NAND gates.

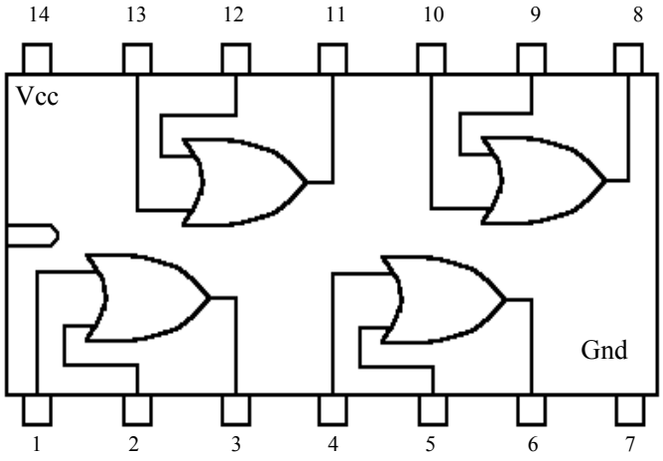

Figure 10 – 7432 (labelled *HD74LS32P*) quadruple 2-input OR gates.

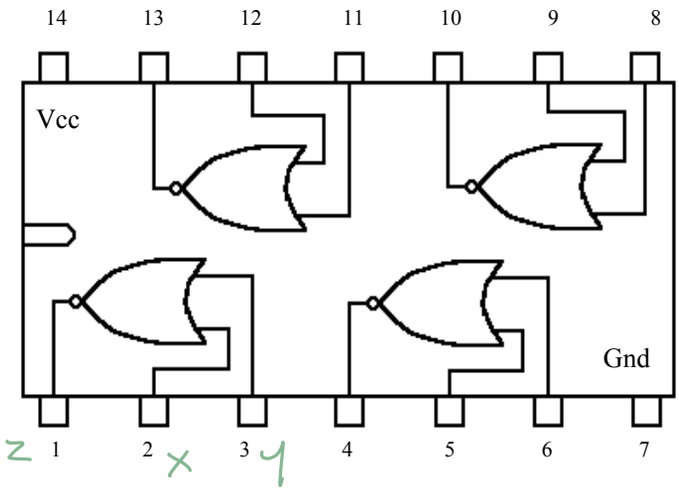

0: 0–0.8 伏
1: 2–5 伏

Figure 11 – 7402 (labelled *HD74LS02P*) quadruple 2-input NOR gates.

Looking at any of the 2-input gates, if we designate the two inputs as ***x*** and ***y*** and the output as ***z***, then at any time the variables ***x***, ***y*** and ***z*** are each at a logic state of either "0" or "1". Logic "0" is represented as a voltage typically between *0* and *0.8 volts*, and logic "1" in the range of 2 to *5 volts*. The same applies to the inverter, although it only has one input, ***x***, and one output, ***z***. Output ***z*** is a function of the inputs, the functions being **NOT** (inverter), **AND**, **NAND**, **OR** or **NOR** using the ICs listed above.

7. Experiments

EXPERIMENT 1 – Verifying the Truth Tables

(***) Question 7.1.1 [4 Marks] – Complete the **Table 1** below by testing each IC of *Section 6 – "Logic Gates"* (i.e., from **Figure 7** through to **Figure 11**) in turn.

Inputs		**Outputs ($z = f(x, y)$)**				
		7404	7408	7400	7432	7402
X	***Y***	***x'***	***x.y***	***(x.y)'***	***x+y***	***(x+y)'***
0	0	1	0	1	0	1
0	1	-	0	1	1	0
1	0	0	0	1	1	0
1	1	-	1	0	1	0

Table 1 – ***Answer to Question 7.1.1***: Testing of 74 Series TTL Circuits.

Note: The prime symbol (′) in **Table 1** indicates inversion, as defined in the course textbook.

只需使用IC上的一个门就行　输入和DIL Switch连

You only need to test one gate on each IC. Connect the input(s) to the DIL Switch, via the SIL Commoned Resistor (on the left of **Figure 6**) and the output to an LED in the LED Bar Graph Array, via the 8-Channel Darlington Driver IC. Set the switches first to '0' and look at the output LED. 'ON' indicates logic '1', and 'OFF' indicates logic '0'. Note the result in the appropriate place in the table. 灯亮 → 1

Continue with the remaining switch combinations and then test the next IC. If any of the results are not as you expected, double check that the connections are correct (e.g., have you connected the

power pins?). Then go over your experimental procedure again. ~~If it looks as though the IC may be faulty, ask for another one~~ and repeat the experiment.

Question 7.1.2 [2 Marks] – Describe in your own words:

a) What is the aim of **Experiment 1** (i.e., what is the purpose of the experiment)?

Answer to Question 7.1.2 – a)

The aim of Experiment 1 is to verify the functionality and truth tables of various ICs that represent 5 kinds of basic logic gates.

b) What method did you follow to execute **Experiment 1** (i.e., what steps were required to execute the experiment)?

Answer to Question 7.1.2 – b)

step 1: gather all necessary equipment
step 2: review the theoretical truth tables
step 3: set up circuit for each logic gate
step 4: conduct the experiment
step 5: verification and analysis
step 6: disconnect the circuit

EXPERIMENT 2 – Alternative Implementations of Functions

(***) Question 7.2.1 [4 Marks] – Implement the circuits in **Figure 12** and complete their truth tables. Compare the results with functions in **Experiment 1**; what conclusions can you derive?

Answer to Question 7.2.1

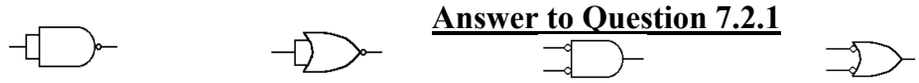

Input A	Input B	Output F
0	0	1
0	1	1
1	0	1
1	1	0

Input A	Input B	Output F
0	0	1
0	1	0
1	0	0
1	1	0

Input A	Input B	Output F
0	0	1
0	1	0
1	0	0
1	1	0

Input A	Input B	Output F
0	0	1
0	1	1
1	0	1
1	1	0

Conclusion: 1st and 4th have the same result
2nd and 3rd have the same result

Note: The circles on the inputs to the AND and OR gates indicate inversion, which you may implement in any one of the 3 ways that you should have discovered by now.

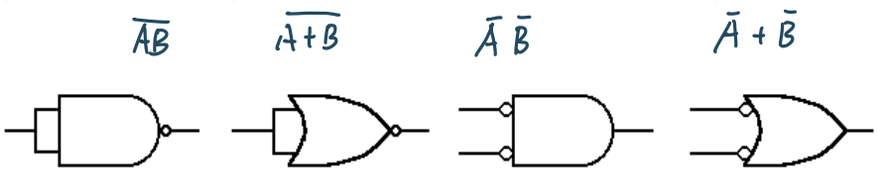

Figure 12 – Functions to be implemented.

Question 7.2.2 [3 Marks]

a) What logic function do the first two circuits (of **Figure 12**) represent?

Answer to Question 7.2.2 – a)

1st: $F = \overline{AB}$

2nd: $F = \overline{A+B}$

b) The 3rd and 4th circuits in **Figure 12** should have identical Truth Tables to two of the functions tested in **Experiment 1**. If so, write down the Boolean equation for each identical pair (for example, the 4th function in **Figure 12** is written ***x'+ y'***). What important Theorem do the two equations illustrate?

Answer to Question 7.2.2 – b)

3rd: $x'y' = (x+y)'$

4th: $x' + y' = (x.y)'$

They illustrate the De Morgan's theorem.

Question 7.2.3 [2 Marks] – Describe in your own words:

a) What is the aim of **Experiment 2** (i.e., what is the purpose of the experiment)?

Answer to Question 7.2.3 – a)

1. To deepen our understanding of logic function and boolean equations and their implementation using logic gates.
2. To illustrate the principles of De Morgan's Theorems through practical application.

b) What method did you follow to execute **Experiment 2** (i.e., what steps were required to execute the experiment)?

Answer to Question 7.2.3 – b)

1. determine the types of logic gates needed
2. gather materials
3. set up the circuit
4. test and complete the truth table
5. analysis and comparison
6. disconnect the circuits

EXPERIMENT 3 – The Exclusive OR (XOR) Function

The Exclusive OR function is used less frequently than the other standard forms that you have used so far, and so is not available here on an IC. However, it can be implemented in a number of different ways; probably the simplest way is using all four gates on a 7400 IC.

(***) Question 7.3.1 [5 Marks] – Build and test the circuit shown in **Figure 13** and complete the truth table.

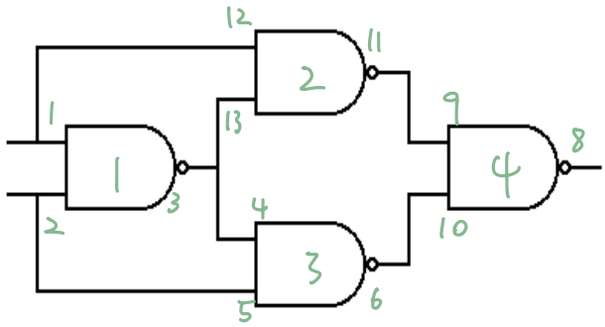

Figure 13 – The Exclusive OR function, using NAND gates and the XOR logic symbol.

只用1个IC画图，连电路

HINT: Use only one IC. Draw your proposed chip diagram in the space provided below and then, referring to **Figure 9**, write appropriate *pin* numbers against all the gate connections. Connect up the circuit using your diagram as a guide. This will make fault finding much easier for you and the demonstrators – remember that if you need help, the demonstrator will not be able to follow an undocumented mess!

Answer to Question 7.3.1

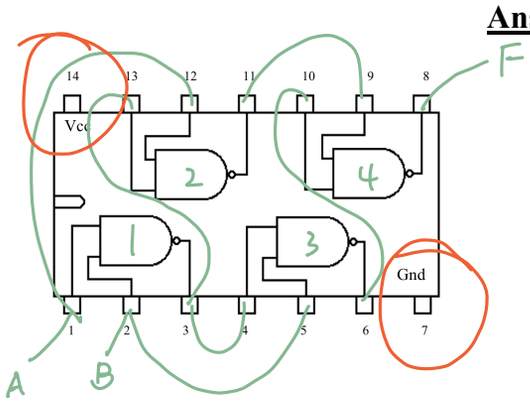

Input 1		Input 2		Input 3		Input 4		Output
A	B	A	B	A	B	A	B	F
0	0	0	1	0	1	1	1	0
1	0	1	1	1	0	0	1	1
0	1	0	1	1	1	1	0	1
1	1	1	0	0	1	1	1	0

Question 7.3.2 [1 Mark]

a) What is the Boolean equation for the XOR gate? (**Note**: This should be evident from the Truth Table.)

Answer to Question 7.3.2

$F = XY' + X'Y$

Question 7.3.3 [2 Marks] – Describe in your own words:

a) What is the aim of **Experiment 3** (i.e., what is the purpose of the experiment)?

Answer to Question 7.3.3 – a)

To show how an XOR gate can be implemented using NAND gates.
To demonstrate the flexibility and power of NAND gates.

b) What method did you follow to execute **Experiment 3** (i.e., what steps were required to execute the experiment)?

Answer to Question 7.3.3 – b)

1. design the circuit
2. draw the chip diagram
3. gather materials
4. set up the circuit
5. test and complete the Truth Table
6. disconnect the circuit.

END OF Lab Session 1: Introduction to Digital Logic